Optimal Allocation of Local Feedback in Multistage Amplifiers via Geometric Programming

Joel L. Dawson, Stephen P. Boyd, Maria del Mar Hershenson, Thomas H. Lee

Electrical Engineering Department, Stanford University

December 15, 1999

Abstract

We consider the problem of optimally allocating local feedback to the stages of a multistage amplifier. The local feedback gains affect many performance indices for the overall amplifier, such as bandwidth, gain, rise-time, delay, output signal swing, linearity, and noise performance, in a complicated and nonlinear fashion, making optimization of the feedback gains a challenging problem. In this paper we show that this problem, though complicated and nonlinear, can be formulated as a special type of optimization problem called *geometric programming*. Geometric programs can be solved globally and efficiently using recently developed interior-point methods. Our method therefore gives a complete solution to the problem of optimally allocating local feedback gains, taking into account a wide variety of constraints.

1 Introduction

The use of linear feedback around an amplifier stage was pioneered by Black [1], Bode [2], and others. The relation between the choice of feedback gain and the (closed-loop) gain, bandwidth, rise-time, sensitivity, noise, and distortion properties, is well understood (see, e.g., [3]). For a single stage amplifer, the choice of the (single) feedback gain is a simple problem.

In this paper, we consider the *multistage* amplifier shown in figure 1, consisting of n open-loop amplifier stages denoted $A_1, \ldots, A_n$, with local feedback gains $f_1, \ldots, f_n$ employed around the stages.

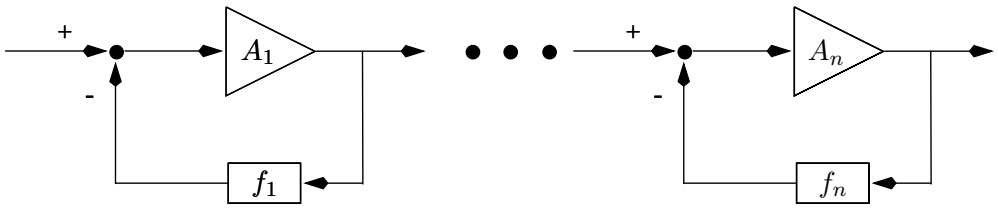

Figure 1: Block diagram of multistage amplifier.

We assume that the amplifier stages are fixed, and consider the problem of choosing the feedback gains $f_1, \ldots, f_n$. The choice of these feedback gains affects a wide variety of performance measures for the overall amplifier, including gain, bandwidth, rise-time, delay, noise, distortion and sensitivity properties, maximum output swing, and dynamic range. These performance measures depend on the feedback gains in a complicated and nonlinear manner. It is thus far from clear, given a set of specifications, how to find an optimal choice of feedback gains. We refer to the problem of determining optimal values of the feedback gains, for a given set of specifications on overall amplifier performance, as the *local feedback allocation problem*.

We will show that the local feedback allocation problem can be cast as a *geometric program* (GP), which is a special type of optimization problem. Even complicated geometric programs can be solved very efficiently, and globally, by recently developed interior-point methods (see [4, 5, 6]). Therefore we are able to give a complete, global, and efficient solution to the local feedback allocation problem.

In §2, we give a detailed description of the models of an amplifier stage used to analyze the performance of the amplifier. Though simple, the models capture the basic qualitative behavior of a source-degenerated differential pair. In §3, we derive expressions for the various performance measures for the overall amplifier, in terms of the local feedback gains. In §4, we give a brief description of geometric programming, and in §5, we put it all together to show how the optimal local feedback allocation problem can be cast as a geometric program. Design examples are given in §6.

2 Amplifier stage models

In this section we describe several different models of an amplifier stage, used for different types of analysis.

2.1 Linearized static model

The simplest model we use is the linear static model shown in figure 2. The stage is characterized by $y_i = \alpha_i e_i$, where α_i is the gain of the ith stage, which we assume to be positive. We will use this simple model for determining the overall gain of the amplifier, determining the maximum signal swing, and the sensitivity of the amplifier gain to each stage gain.

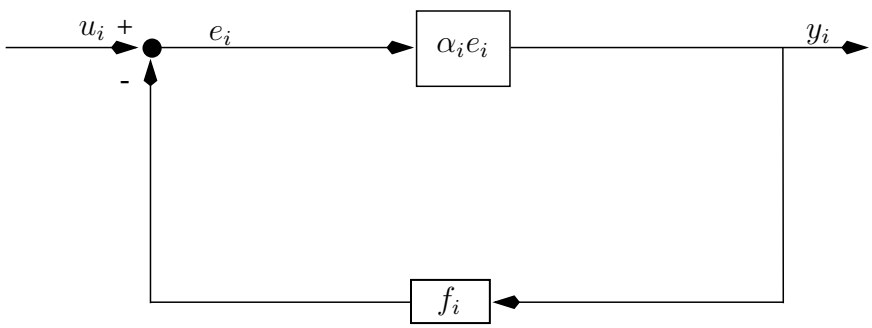

Figure 2: Linearized static model of amplifier stage.

2.2 Static nonlinear model

To quantify nonlinear distortion effects, we will use a static nonlinear model of the amplifier stage, as shown in figure 3. We assume that the nonlinearity or transfer characteristic has the form

$$y_i = a_i(e) = \alpha_i e - \beta_i e^3 + o(e^3). \tag{1}$$

This form is inspired by the transfer characteristic of a source-coupled pair [7], and is a general model for third-order nonlinearity in a stage with an odd transfer characteristic. The function $a_i(\cdot)$ is called the *transfer characteristic* of the ith stage, and β_i is called the *third-order coefficient* of the amplifier stage. Note that the gain and third-order coefficient are related to the transfer characteristic by

$$\alpha_i = a_i'(0), \quad \beta_i = -\frac{a_i'''(0)}{6}.$$

We assume that $\beta_i \geq 0$, which means the third-order term is *compressive*; as the signal level increases from zero, the nonlinear term tends to decrease the output amplitude compared to the linear model.

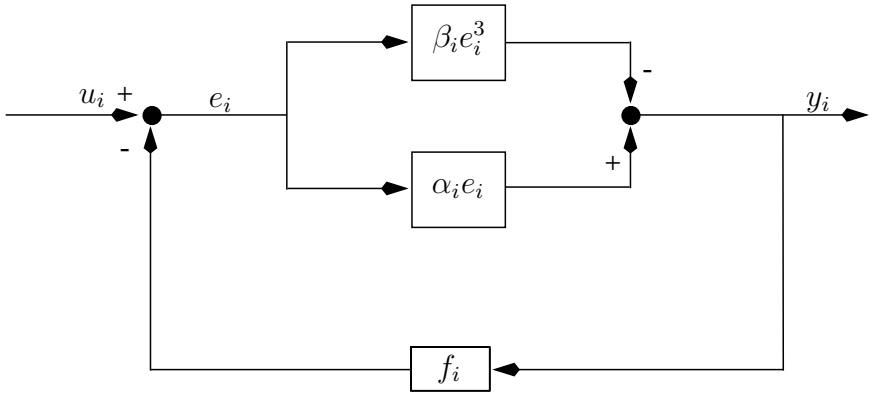

Figure 3: Nonlinear static model of amplifier stage.

2.3 Linearized dynamic model

To characterize the bandwidth, delay, and rise-time of the overall amplifier, we use the linearized dynamic model shown in figure 4. Here the stage is represented by a simple one-pole transfer function, with time constant τ_i (which we assume to be positive).

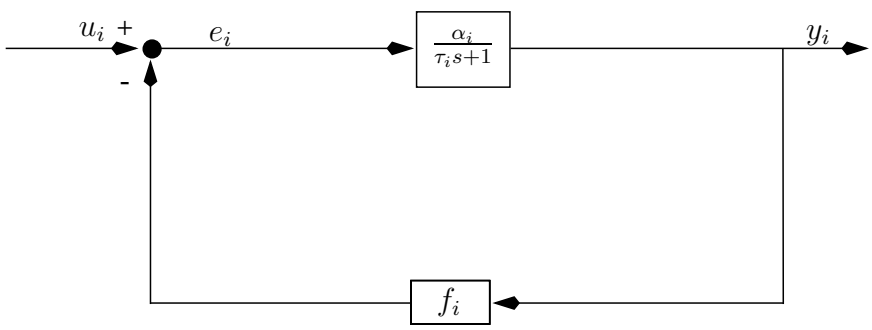

Figure 4: Linear dynamic model of amplifier stage.

2.4 Static noise model

Last, we have the static noise model shown in figure 5, which includes a simple output-referred noise v_i. As will become clear later, more complicated noise models including input noise, or noise injected in the feedback loop, are also readily handled by our method. Our noise model is characterized by the RMS value of the noise source, which we denote $\overline{v_i}$. We assume that noise sources associated with different stages are uncorrelated.

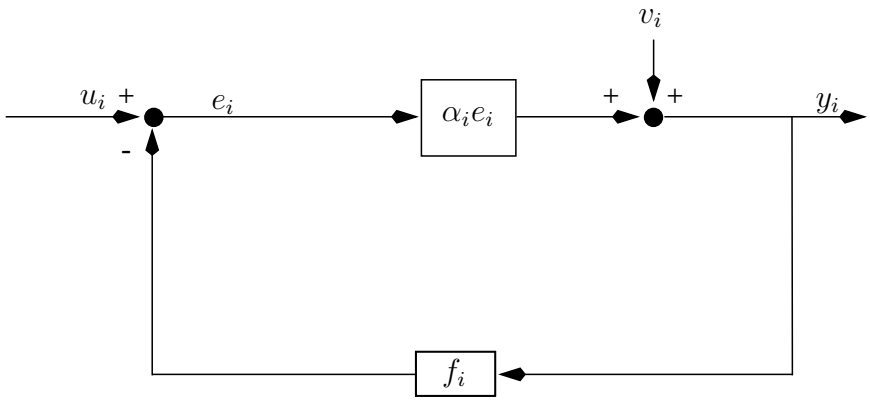

Figure 5: Static noise model of amplifier stage.

3 Amplifier analysis

In this section we derive expressions for various performance indices for the overall amplifier, which we express in terms of the *return differences* of the stages, defined as

$$l_i = 1 + f_i \alpha_i.$$

3.1 Gain and output swing

We consider the linear static model of §2.1. The gain of the amplifier, from input u_1 to the output of the kth stage y_k is given by

$$\prod_{i=1}^{k} \frac{\alpha_i}{1 + \alpha_i f_i} = \prod_{i=1}^{k} \frac{\alpha_i}{l_i},$$

and the overall gain, from u_1 to y_n, is given by

$$\tilde{\alpha} = \prod_{i=1}^{n} \frac{\alpha_i}{l_i}. \tag{2}$$

Here, of course, α_i/l_i is the familiar expression for the closed-loop gain of the ith stage. It will be convenient later to use the notation

$$\tilde{\alpha}_i = \frac{\alpha_i}{l_i}$$

to denote the closed-loop gain of the ith stage. (In general, we will use the tilde to denote a closed-loop expression.)

Now suppose the input signal level is $U = |u_1|$, and that the ith stage has a maximum allowed output signal level of Y_i, i.e., we require $|y_i| \leq Y_i$. This in turn means that for $k = 1, \ldots, n$, we have

$$U \prod_{i=1}^{k} \frac{\alpha_i}{l_i} \leq Y_k,$$

so the maximum allowed input signal level is

$$U_{\max} = \max_{k=1,\ldots,n} Y_k \prod_{i=1}^{k} \frac{l_i}{\alpha_i}.$$

The maximum allowed output signal level is found by multiplying by the overall gain:

$$Y_{\max} = \max_{k=1,\ldots,n} Y_k \prod_{i=k+1}^{n} \frac{\alpha_i}{l_i} \tag{3}$$

(where the empty product, when $i = n$, is interpreted as one).

3.2 Sensitivity

The (logarithmic) sensitivity of the overall amplifier gain to the open-loop gain of the ith stage is given by

$$S_i = \frac{\partial \log \tilde{\alpha}}{\partial \log \alpha_i} = \frac{1}{l_i}. \tag{4}$$

3.3 Nonlinearity

We begin by deriving the closed-loop third-order coefficient of a single feedback amplifier stage, using the static nonlinear model of §2.2. The output y is related to the input u through the relation

$$y = a(u - fy).$$

Differenting both sides with respect to u leads to the familiar result from elementary feedback theory:

$$y'(0) = \frac{a'(0)}{1 + fa'(0)} = \frac{\alpha}{l} = \tilde{\alpha}.$$

Differentiating again yields

$$y''(0) = \frac{a''(0)}{l^3} = 0,$$

and, once more,

$$y'''(0) = \frac{a'''(0)l - 3fa''(0)^2}{l^5} = -\frac{6\beta}{l^4}, \tag{5}$$

using $a'''(0) = -6\beta$ and $a''(0) = 0$ from the previous equation. This equation shows that the third-order coefficient of the closed-loop transfer characteristic is given by

$$\tilde{\beta} = \frac{y'''(0)}{6} = \frac{\beta}{l^4}.$$

This is the well-known result showing the linearizing effect of (linear) feedback on an amplifier stage.

Next, let's consider a cascade of two amplifier stages. Let the transfer characteristics of two stages be $y_1(\cdot)$ and $y_2(\cdot)$. We write

$$\phi_2(u) = y_2(y_1(u))$$

and differentiate:

$$\phi_2'(0) = y_2'(0)y_1'(0), \quad \phi_2''(0) = y_2'(0)y_1''(0) + (y_1'(0))^2 y_2''(0)$$

and so

$$\phi_2'''(0) = y_2'(0)y_1'''(0) + y_1'(0)^3 y_2'''(0) + 3y_2''(0)y_1'(0)y_1''(0).$$

Since y_1 and y_2 are both odd functions, the last term vanishes. This shows that the third-order coefficient of the cascade of the two stages in given by

$$\tilde{\beta}_1\tilde{\alpha}_2 + \tilde{\beta}_2\tilde{\alpha}_1^3.$$

More generally, the third-order coefficient of a cascade of n stages can be expressed as

$$\tilde{\beta} = \sum_{i=1}^{n} \left[\left(\prod_{k=1}^{i-1} \tilde{\alpha}_k^3 \right) \tilde{\beta}_i \left(\prod_{j=i+1}^{n} \tilde{\alpha}_j \right) \right]. \tag{6}$$

This very complicated formula gives the relation between the local return differences and the third-order coefficient of the overall amplifier.

3.4 Bandwidth

We next examine the linearized dynamic performance of the amplifier chain, using the stage model given in §2.3. The transfer function of an individual stage is given by

$$\frac{Y_i(s)}{U_i(s)} = \frac{\alpha_i/(\tau_i s + 1)}{1 + f_i\alpha_i/(\tau_i s + 1)} = \frac{\tilde{\alpha}_i}{\tilde{\tau}_i s + 1},$$

where $\tilde{\tau}_i = \tau_i/l_i$ is the closed-loop time constant of the ith stage. The transfer function of the entire cascade amplifier immediately follows:

$$H(s) = \prod_{i=1}^{n} \frac{\tilde{\alpha}_i}{\tilde{\tau}_i s + 1}. \tag{7}$$

The -3dB bandwidth of the amplifier is defined as the smallest frequency ω for which $|H(j\omega)| = |H(0)|/\sqrt{2}$.

3.5 Delay and rise-time

The rise-time and delay of the overall amplifier can be characterized in terms of the moments of the impulse response, as described in [8]. The delay is the normalized first moment of the impulse response of the system:

$$t_d = \frac{\int_{-\infty}^{\infty} t h(t) dt}{\int_{-\infty}^{\infty} h(t) dt}.$$

Using basic properties of the Laplace transform and results from section 3.4, we have

$$t_d = \frac{-\left.\frac{dH(s)}{ds}\right|_{s=0}}{H(0)} = -\frac{d}{ds} \prod_{i=1}^{n} \frac{1}{\tilde{\tau}_i s + 1}\bigg|_{s=0} = \sum_{i=1}^{n} \tilde{\tau}_i = \sum_{i=1}^{n} \frac{\tau_i}{l_i}. \tag{8}$$

This formula shows the exact relation between the overall amplifier delay (as characterized by the first moment of the impulse repsonse) and the local return differences l_i.

We use the second moment of the impulse response,

$$t_r^2 = 4\left[\frac{\int_{-\infty}^{\infty} t^2 h(t)dt}{\int_{-\infty}^{\infty} h(t)dt} - t_d^2\right] \tag{9}$$

as a measure of the square of the rise-time of the overall amplifier in response to a step input. Again making use of Laplace transform identities, we express (9) in terms of the transfer function $H(s)$:

$$t_r^2 = \frac{4}{H(0)}\left[\frac{d^2}{ds^2}H(s)\bigg|_{s=0} - t_d^2\right]. \tag{10}$$

Substituting the transfer function of the amplifier, given in equation (7), we find that the rise-time of the overall amplifier is

$$t_r^2 = 4\sum_{i=1}^{n}\frac{\tau_i^2}{l_i^2} \tag{11}$$

(using the fact that the closed-loop rise-time of the ith stage is $2\tilde{\tau}_i$).

3.6 Noise and dynamic range

We now consider the static noise model of §2.4. The mean-squared noise amplitude at the output of the overall amplifier can be written

$$\overline{v_{\text{out}}}^2 = \sum_{i=1}^{n}\left(\frac{\overline{v_i}^2}{l_i^2}\left[\prod_{j=i+1}^{n}\frac{\alpha_j}{l_j}\right]^2\right).$$

The input-referred mean-squared noise is then

$$\overline{v_{\text{in}}}^2 = \frac{\overline{v_{\text{out}}}^2}{\tilde{\alpha}^2} = \sum_{i=1}^{n}\left(\frac{\overline{v_i}^2}{\alpha_i^2}\left[\prod_{j=1}^{i-1}\frac{l_j}{\alpha_j}\right]^2\right). \tag{12}$$

The *dynamic range* of the amplifier is the ratio of maximum output range to output referred RMS noise level, expressed in decibels:

$$\text{DR} = 20\log_{10}\frac{Y_{\max}}{\overline{v_{\text{out}}}}. \tag{13}$$

3.7 SFDR and IIP linearity measures

We conclude this analysis by obtaining expressions for the spurious-free dynamic range (SFDR) and the input-referred third-order intercept point (IIP3). They are both readily derived from the results in 3.3 through 3.6, and so contain no new information or analysis, but they are widely used performance indices for the amplifier.

SFDR and IIP3 give information about the linearity of an amplifier. They concern the results of the following experiment: inject a signal $v\cos\omega_1 t + v\cos\omega_2 t$ at the input, and examine the output for the presence of intermodulation (IM) products. We concern ourselves here with third-order IM products, which owe their existence to non-zero β_i. The third order intermodulation products are:

$$\left[\frac{3}{4}\tilde{\beta}v^3\right]\left[\cos(\omega_1+2\omega_2)t+\cos(\omega_1-2\omega_2)t+\cos(2\omega_1+\omega_2)t+\cos(2\omega_1-\omega_2)t\right].$$

The SFDR is defined as the signal-to-noise ratio when the power in each third order intermodulation product equals the noise power at the output [9]. It is straightforward to derive: simply refer a third order IM product back to the input and equate to the input-referred RMS noise amplitude:

$$\frac{1}{\tilde{\alpha}}\left[\frac{3}{4}\tilde{\beta}v^3\right] = \overline{v_{\text{in}}}.$$

The SFDR in decibels is then given by

$$\text{SFDR} = \frac{2}{3}(10)\log_{10}\left(\frac{\frac{4}{3}\left|\frac{\tilde{\alpha}}{\tilde{\beta}}\right|}{\overline{v_{\text{in}}}^2}\right). \tag{14}$$

The IIP3 is the input power at which the amplitude of the third-order IM products equals the input. Mathematically, we require

$$|\tilde{\alpha}v| = \left|\frac{4}{3}\tilde{\beta}v^3\right|.$$

Normalizing the input resistance to unity for convenience, we have for IIP3

$$\text{IIP3} = \frac{2}{3}\left|\frac{\tilde{\alpha}}{\tilde{\beta}}\right|. \tag{15}$$

4 Geometric programming

Let f be a real-valued function of n real, positive variables $x_1, x_2, \ldots, x_n$. It is called a *posynomial* function if it has the form

$$f(x_1, \ldots, x_n) = \sum_{k=1}^{t} c_k x_1^{\alpha_{1k}} x_2^{\alpha_{2k}} \cdots x_n^{\alpha_{nk}}$$

where $c_j \geq 0$ and $\alpha_{ij} \in \mathbf{R}$. When $t = 1$, f is called a *monomial* function. Thus, for example, $0.7 + 2x_1/x_3^2 + x_2^{0.3}$ is posynomial and $2.3(x_1/x_2)^{1.5}$ is a monomial. Posynomials are closed under sums, products, and nonnegative scaling.

A *geometric program* (GP) has the form

$$\begin{array}{ll} \text{minimize} & f_0(x) \\ \text{subject to} & f_i(x) \leq 1, \quad i = 1, 2, \ldots, m, \\ & g_i(x) = 1, \quad i = 1, 2, \ldots, p, \\ & x_i > 0, \quad i = 1, 2, \ldots, n, \end{array} \tag{16}$$

where f_i are posynomial functions and g_i are monomial functions. Geometric programs were introduced by Duffin, Peterson, and Zener in the 1960s [10].

The most important property of geometric programs for us is that they can be solved, with great efficiency, and globally, using recently developed interior-point methods [6, 4]. Geometric programming has recently been used to optimally design electronic circuits including CMOS op-amps [11, 12], and planar spiral inductors [13].

Several simple extensions are readily handled by geometric programming. If f is a posynomial and g is a monomial, then the constraint $f(x) \leq g(x)$ can be expressed as $f(x)/g(x) \leq 1$ (since f/g is posynomial). In particular, constraints of the form $f(x) \leq a$, where $a > 0$ is a constant, can also be used. Similarly, if g_1 and g_2 are both monomial functions, the constraint $g_1(x) = g_2(x)$ can be expressed as $g_1(x)/g_2(x) = 1$ (since g_1/g_2 is monomial). If g is a monomial, we can maximize it by minimizing the posynomial function $1/g$.

5 Optimal local feedback allocation

We now make the following observation, based on the results of section 3: a wide variety of specifications for the performance indices of the overall amplifier can be expressed in a form compatible with geometric programming, using the variables l_i, which are the local return differences. The startling implication is that optimal feedback allocation can be determined using geometric programming.

The true optimization variables are the feedback gains f_i, but we will use instead the return differences l_i, with the constraints $l_i \geq 1$ imposed to ensure that $f_i \geq 0$. Once we determine the optimal values for l_i, we can find the optimal feedback gains via

$$f_i = (l_i - 1)/\alpha_i.$$

5.1 Closed-loop gain

The closed-loop gain $\tilde{\alpha}$ is given by the monomial expression (2). Therefore we can impose any type of constraint on the closed-loop gain: we can require it to equal a given value, or specify a minimum or maximum value for the closed-loop gain. Each of these constraints can be handled by geometric programming.

5.2 Maximum signal swing

The maximum output signal swing is given by the expression (3). The constraint that the output swing exceed a minimum required value, i.e., $Y_{\max} \geq \gamma$, can be expressed as

$$Y_k \prod_{i=k+1}^{n} \frac{\alpha_i}{l_i} \geq \gamma, \quad k = 1, \ldots, n. \tag{17}$$

Each of these inequalities is a monomial inequality, and hence can be handled by geometric programming. Note that we also allow the bound on signal swing, i.e., γ, as a variable here.

5.3 Sensitivity

The sensitivity of the amplifier to the ith stage gain is given by the monomial expression (4). It follows that we can place an upper bound on the sensitivity (or, if we choose, a lower bound or equality constraint).

5.4 Bandwidth

Consider the constraint that the closed-loop -3dB bandwidth should exceed Ω. Since the magnitude of the transfer function of the amplifier is monotonically decreasing as a function of frequency, this is equivalent to imposing the constraint

$$|H(j\Omega)| \geq \frac{1}{\sqrt{2}} H(0),$$

which we can rewrite as

$$\frac{1}{|H(j\Omega)|^2} \leq \frac{2}{H(0)^2}.$$

Now using the expression for the transfer function,

$$H(j\omega) = \prod_{i=1}^{n} \frac{\alpha_i}{j\tau_i\omega + l_i},$$

we can write the bandwidth constraint as

$$\left|\frac{1}{H(j\Omega)}\right|^2 = \prod_{i=1}^{n} \frac{(\tau_i\Omega)^2 + l_i^2}{\alpha_i^2} \leq 2\prod_{i=1}^{n} \frac{l_i^2}{\alpha_i^2}.$$

This, in turn, we can express as

$$\prod_{i=1}^{n} \frac{(\tau_i\Omega)^2 + l_i^2}{l_i^2} \leq 2.$$

This is a complicated, but posynomial inequality in the variables l_i, hence can be handled by geometric programming. Note that we can even make the minimum -3dB bandwidth Ω a variable, and maximize it.

5.5 Noise and dynamic range

The expression (12) for the input-referred noise power, is a complicated, but posynomial functions of the variables $l_1, \ldots, l_n$. Therefore we can impose a maximum on the input-referred noise level, using geometric programming.

The requirement that the dynamic range exceed some minimum allowed value $\mathrm{DR}_{\mathrm{min}}$, i.e., $\mathrm{DR} \geq \mathrm{DR}_{\mathrm{min}}$, can be expressed as

$$\frac{\overline{v_{\mathrm{out}}^2}}{\gamma} \leq 10^{-\mathrm{DR}/10},$$

where γ is the bound on signal swing defined in (17). Therefore, this constraint can be handled by geometric programming.

5.6 Delay and rise-time

As can be seen in equations (8) and (11), the expressions for delay and rise-time are posynomial functions of the return differences l_i, so a maximum on each can be imposed.

5.7 Third-order distortion

The expression for third-order coefficient, given in (6), is a posynomial, so we can impose a maximum on the third-order coefficient.

5.8 SFDR and IIP3

Consider the constraint that the SFDR should exceed some minimum value γ. Using the expression (14), we can write this as

$$\frac{2}{3}(10)\log_{10}\left(\frac{\frac{4}{3}\left|\frac{\tilde{\alpha}}{\tilde{\beta}}\right|}{\overline{v_{\text{in}}}^2}\right) \geq \gamma.$$

This can be written as

$$\frac{4}{3}\frac{\tilde{\alpha}}{\tilde{\beta}}\frac{1}{\overline{v_{\text{in}}}^2} \geq 10^{3\gamma/20}.$$

This can be handled by geometric programming by writing it as

$$\frac{\tilde{\beta}}{\tilde{\alpha}}\overline{v_{\text{in}}}^2 \leq \frac{3}{4}10^{-3\gamma/20}.$$

6 Design Examples

We have shown that complicated problems of feedback allocation can be solved, globally, and efficiently, using geometric programming. We can take as objective any of the posynomial performance measures described above, and any combination of the constraints described above. In addition to solving particular problems, we can also compute optimal trade-off curves, by varying one of the specifications or constraints over a range, and computing the optimal value of the objective for each value of the specification.

6.1 Trade-offs among bandwidth, gain, and noise

In our first example we consider a three-stage amplifier, with all stages identical, with parameters

$$\alpha_i = 10, \qquad \tau_i = 10^{-6}\text{sec}, \qquad \overline{v_{n,i}} = 4.07\mu\text{V}.$$

The required closed-loop gain is 23.5dB. We maximized the bandwidth, subject to the equality constraint on closed-loop gain, and a maximum allowed value of input-referred noise.

Figure 6 shows the optimal bandwdith achieved, as a function of the maximum allowed input-referred noise. As it must, the optimal bandwidth increases as we relax (increase) the input-referred noise limit. Figure 7 shows the optimal values of the feedback gains, as the input-referred noise limit varies.

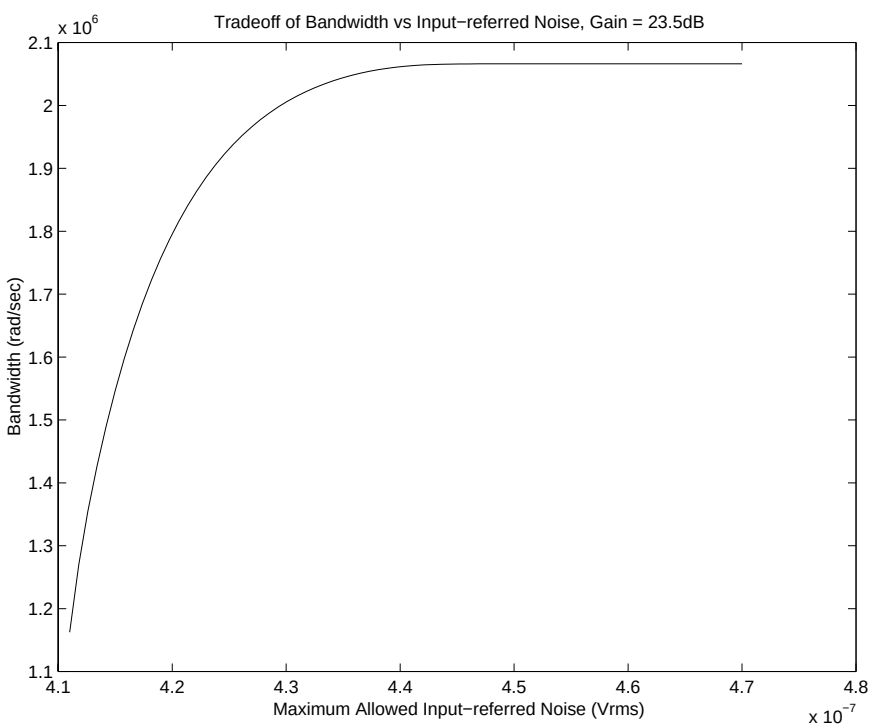

Figure 6: Maximum bandwidth versus limit on input-referred noise.

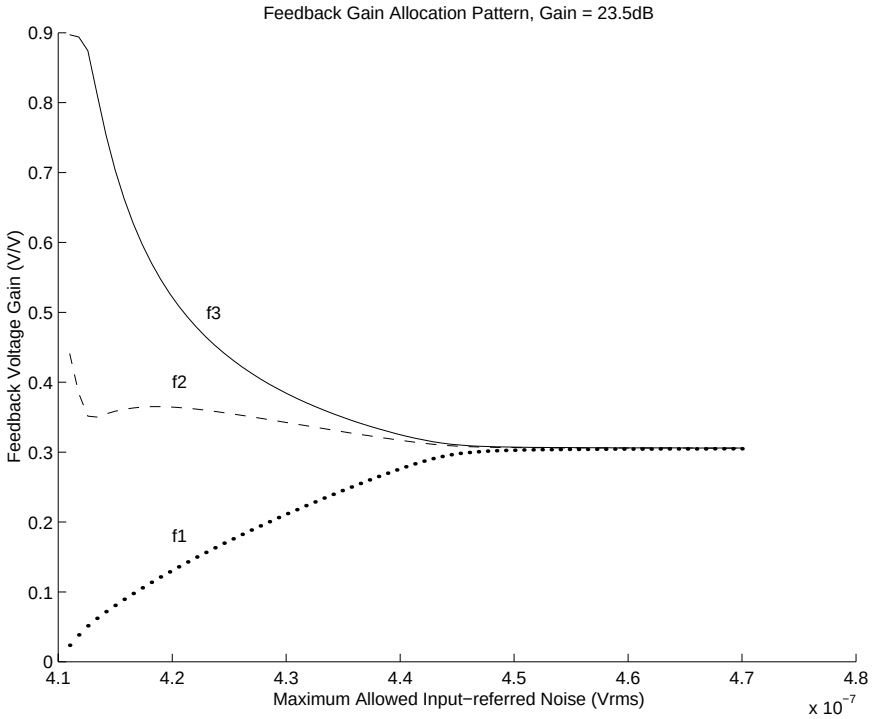

Figure 7: Optimal feedback allocation pattern, for maximum bandwidth with limit on input-referred noise.

These curves roughly identify two regions in the design space. In one, the noise constraint is so relaxed as to not be an issue. The program identifies the optimum bandwidth solution for the given gain, which is to place all of the closed loop poles in the same place. In the other, the tradeoff between bandwidth and noise is strong. Equation (12) shows that the noise contribution of $\overline{v_{n,1}}$ is independent of l_1, but the noise contributions of the following stages can be diminished by making l_1 (and therefore f_1) small. It follows that f_3 is the greatest of the feedback gains, followed by f_2 and f_1.

We can also examine the optimal trade-off between bandwidth and required DC gain. Here we impose the fixed limit on input-referred noise at $4.14e-7$ V rms, and maximize the bandwidth subject to a required closed-loop gain.

Figures 8 and 9, show the maximum attainable bandwidth and the optimal feedback gain allocation, as a function of the required closed-loop gain. Again we see two regions in design space caused by the noise constraint.

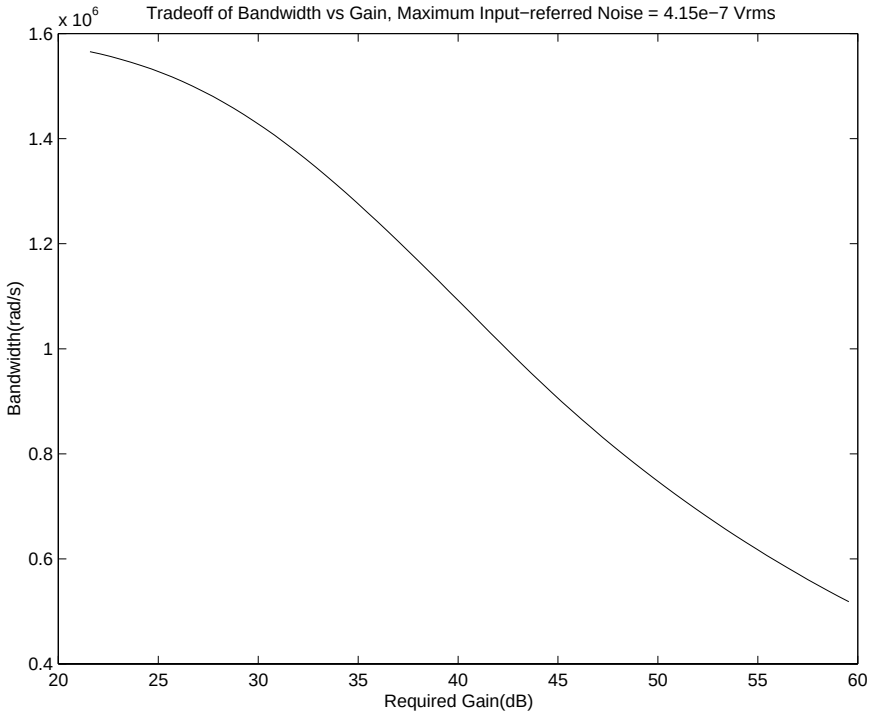

Figure 8: Maximum bandwidth versus required closed-loop gain.

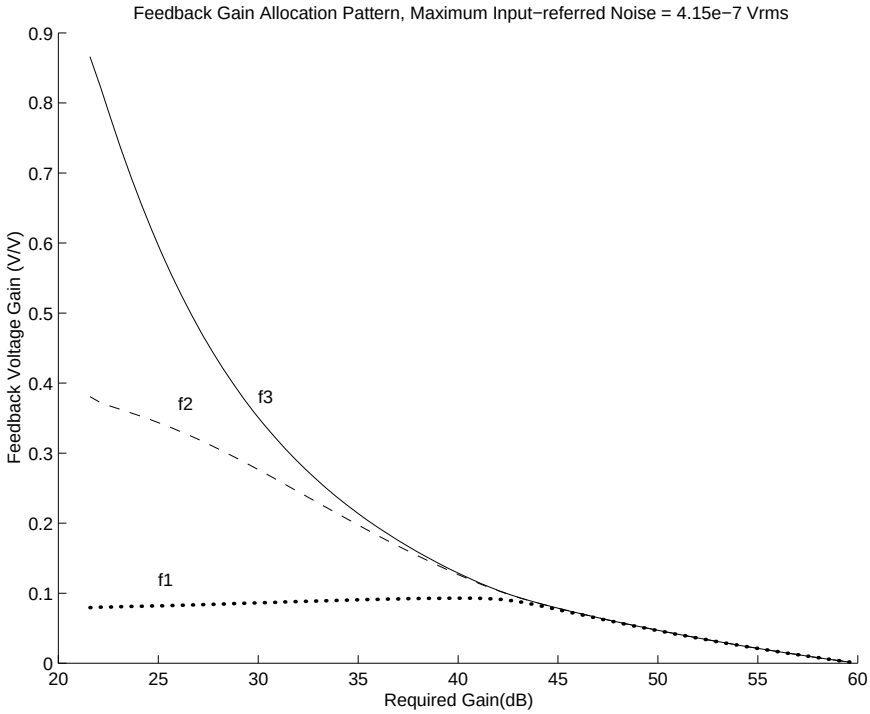

Figure 9: Optimal feedback allocation pattern for maximum bandwidth versus required closed-loop gain.

6.2 SFDR versus gain

In this example, we again consider a three stage amplifier, with identical stages with parameters

$$\alpha_i = 10, \qquad \beta_i = 0.667\text{V}^{-2}, \qquad \overline{v_{n,i}} = 4.07\mu\text{V}.$$

We maximize the spurious-free dynamic range subject to an equality constraint on the overall gain. Figure 10 shows the achieved SFDR as a function of the required gain, and figure 11 shows the associated optimal gain allocation patterns.

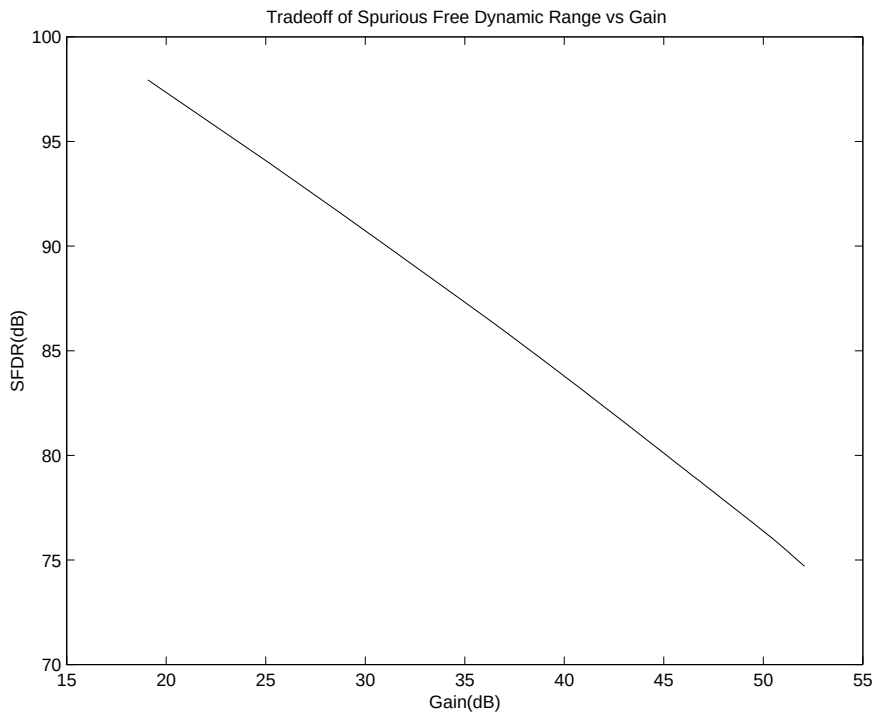

Figure 10: Maximum spurious-free dynamic range versus required gain.

In addition to obtaining optimal designs from the figures 10 and 11, we observe a qualitative trend: feedback gain is allocated preferentially to stages furthest down the signal chain. This is in agreement with sound engineering judgment, and with the results of section 6.1.

We can also argue from the standpoint of optimum linearity that figure 11 makes sense. Nonlinearity in the later stages, where the signal amplitude is the largest, will cause the most severe harmonic distortion. It follows that feedback should be applied more aggressively in later stages.

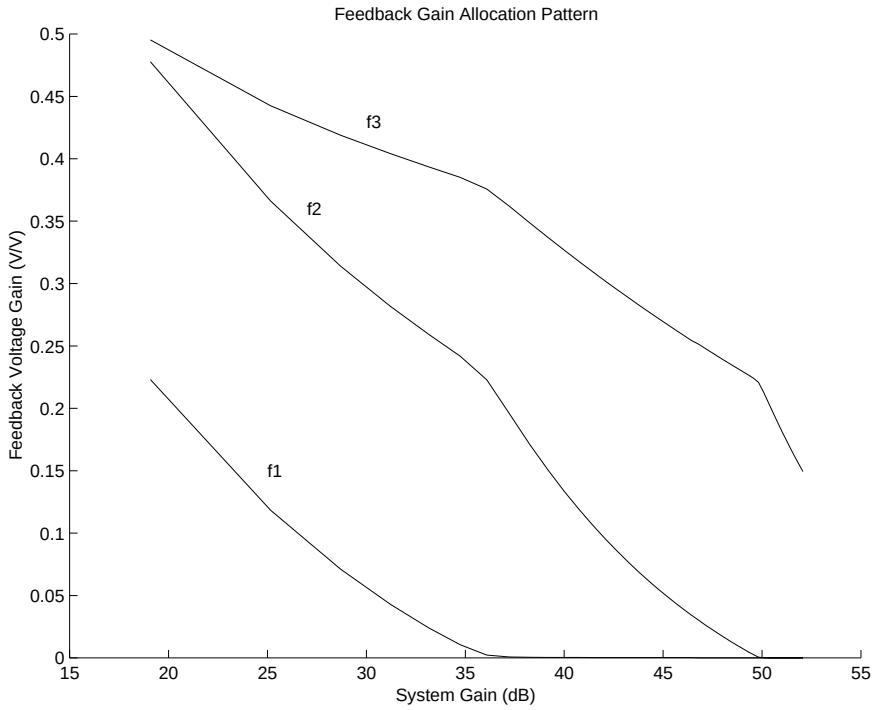

Figure 11: Optimal feedback allocation pattern for maximum spurious-free dynamic range versus required gain.

6.3 Stage selection

The method described in this paper computes the globally optimal values of the local feedback gains, with the amplifier models fixed. We can use the method indirectly to optimally choose each stage, from a set of possible choices, in addition to optimally allocating feedback around the stages. Suppose we have a set of m possible choices for each of n stages. By computing the optimal performance for each m^n possible combinations of stages, we can then determine the optimal combination as well as the optimal feedback gains. Of course the effort required to exhaustively search over the combinations grows rapidly with the number of stages, but is certainly feasible for moderate numbers of stages, e.g., fewer than six or so.

We demonstrate this method for optimal stage selection with an example. Table 1 shows a listing of three candidate stages for use in a multistage amplifier design. Amplifier A can

Amplifier Designation	α_i	β_i	$\overline{v_n}$
A	10	0.67	$41\mu V$
B	10	6.7	$4.1\mu V$
C	10	67	$0.41\mu V$

Table 1: Candidate stages.

be seen to have best linearity and the worst noise; amplifier C has the worst linearity and the best noise, and amplifier B is in between.

Our goal is to maximize SFDR, subject to a required gain of 46dB, for a three-stage design. By solving all 27 combinations, we find that the optimal combination of stages and feedback is

Stage 1 amplifier C, with f = 0.00023,

Stage 2 amplifier B, with f = 0.06589,

Stage 3 amplifier A, with f = 0.20072,

which achieves the optimal SFDR of 85dB.

This solution makes sense: the low-noise stage is used for the first stage (which is more critical for noise, since its noise is amplified by subsequent stages); the high-linearity stage is used for the last stage (which handles larger signals, and so is more critical for distortion).

7 Conclusion

We have shown how to globally and efficiently solve the problem of optimally allocating local feedback gains in a multistage amplifier, by posing the problem in the form of a geometric program. This formulation can handle a wide variety of practical objectives and constraints, and allows us to rapidly compute globally optimal trade-off curves between competing specifications.

We mention several extensions are readily handled. It is not hard to work out the correspodoning (posynomial) formulas for distortion characteristics that are not symmetric, in which the second order term dominates. It is also easy to handle a more sophisticated noise model, in which the noise is injected at several locations in the feedback around each stage, and not just at the output as in the current model. In each case, the resulting noise power expression is still posynomial, and therefore can be handled by geometric programming. Another extension is to couple the design of the feedback together with the actual component-level design of the amplifier (for example, transistor widths and lengths), as in [14].

We envision several situations where the methods described in this paper would be very useful to a circuit designer. Whenever the number of stages is at least three, and the number of important specifications is at least three (say), the problem of optimally allocating local feedback gains becomes quite complex, and a tool that completely automates this process is quite useful. When the number of stages reaches five or six, and the absolute optimal performance is sought, our method will far outperform even a good designer adjusting gains in an ad hoc manner.

References

[1] H. S. Black. Stabilized feedback amplifiers. *Bell System Technical Journal*, 13:1–18, 1934.

[2] H. W. Bode. *Network Analysis and Feedback Amplifier Design*. Van Nostrand, New York, 1945.

[3] J. K. Roberge. *Operational Amplifiers: Theory and Practice*. John Wiley and Sons, Inc., New York, New York, 1975.

[4] S. Boyd and L. Vandenberghe. Introduction to convex optimization with engineering applications. Course Notes, 1997. http://www.stanford.edu/class/ee364/.

[5] J. Ecker. Geometric programming: methods, computations and applications. *SIAM Rev.*, 22(3):338–362, 1980.

[6] Y. Nesterov and A. Nemirovsky. *Interior-point polynomial methods in convex programming*, volume 13 of *Studies in Applied Mathematics*. SIAM, Philadelphia, PA, 1994.

[7] P. R. Gray and R. G. Meyer. *Analysis and Design of Analog Integrated Circuits*. John Wiley and Sons, New York, NY, 1993.

[8] W. M. Siebert. *Circuits, Signals, and Systems*. The MIT Press, Cambridge, MA, 1993.

[9] T. H. Lee. *The Design of CMOS Radio-Frequency Integrated Circuits*. Cambridge University Press, New York, NY, 1998.

[10] R. J. Duffin, E. L. Peterson, and C. Zener. *Geometric Programming — Theory and Applications*. Wiley, 1967.

[11] M. Hershenson, S. Boyd, and T. H. Lee. GPCAD: A tool for CMOS op-amp synthesis. In *IEEE/ACM International Conference on Computer Aided Design*, pages 296–303, San Jose, CA, 1998.

[12] M. Hershenson, S. P. Boyd, and T. H. Lee. Automated design of folded-cascode op-amps with sensitivity analysis. In *International Conference on Electronics, Circuits and Systems*, volume 1, pages 1–1, September 1998.

[13] M. Hershenson, S. Mohan, S. Boyd, and T. H. Lee. Optimization of inductor circuits via geometric programming. In 36th *Design Automation Conference*, 1999. To appear.

[14] M. Hershenson, S. Boyd, and T. H. Lee. Optimal design of a CMOS op-amp via geometric programming. In B. Datta, editor, *Applied and Computational Control, Signals, and Circuits*, volume 2. Birkhauser, 2000.